Dynamax® Pneumatics

ISO 21287

Compact Cylinders

TECHNICAL PRODUCT CATALOG

144 Kay Drive, Easley, SC 29640

CC Series Compact Cylinder ISO 21287

How to Order: *Example: CC50DEM100KNM*

Series CC

Bore *(in mm)*

016	050
020	063
025	080
032	100
040	125

Versions

DE	Double Acting
DEM	Double Acting, Magnetic
SE	Single Acting
SEM	Single Acting, Magnetic

Stroke *(in mm)* — — —

Design Code KN

Threads

M	Male
F	Female

Technical data	
Fluid	Compressed filtered air with or without lubrication. Lubrication, if started, must be continued.
Pressure	Single acting 2 ÷ 10 bar - Double acting 1 ÷ 10 bar
Temperature	-20 °C ÷ +80 °C

144 Kay Drive, Easley, SC 29640

CC Series Compact Cylinder ISO 21287

Bore: 16 - 20 - 25

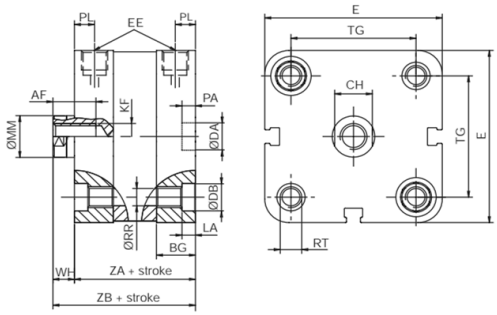

Ø (mm)	Ø MM f7	AF	WH	ZA	ZB	KF	EE	BG	RR	TG	E	RT	LA	Ø DB	PL	CH	Ø DA H9	PA +0.1
16	8	10	4,5	35	39.5	M4	M5	12,7	3,1	18	29	M4	3,5	6	8	7	9	2,1
20	10	10	6	37	43	M6	M5	15	4,1	22	36	M5	4,1	7,5	6	8	9	2,1
25	10	10	6	39	45	M6	M5	15	4,1	26	40	M5	4,1	7,5	5	8	9	2,1

Bore: 32 - 40 - 50 - 63

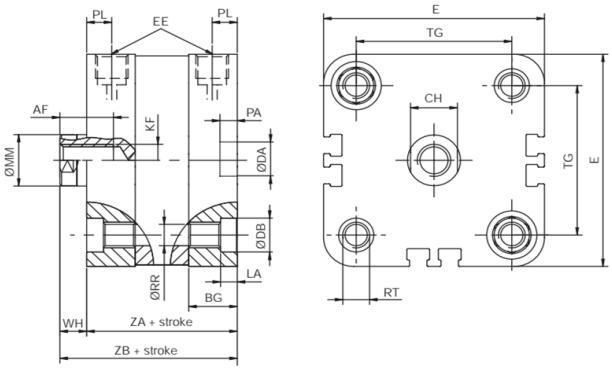

Ø (mm)	Ø MM f7	AF	WH	ZA	ZB	KF	EE	BG	RR	TG	E	RT	LA	Ø DB	PL	CH	Ø DA H9	PA +0.1
32	12	12	7	44	51	M8	1/8"	16	5,1	32,5	47,5	M6	5,1	8,5	7	10	9	2,1
40	12	12	7	45	52	M8	1/8"	16	5,1	38	55	M6	5,1	8,5	7,5	10	9	2,1
50	16	16	8	45	53	M10	1/8"	16	6,4	46,5	66	M8	6,1	10,5	7,5	14	12	2,6
63	16	16	8	49	57	M10	1/8"	16	6,4	56,5	78	M8	6,1	10,5	7	14	12	2,6

CC Series Compact Cylinder ISO 21287

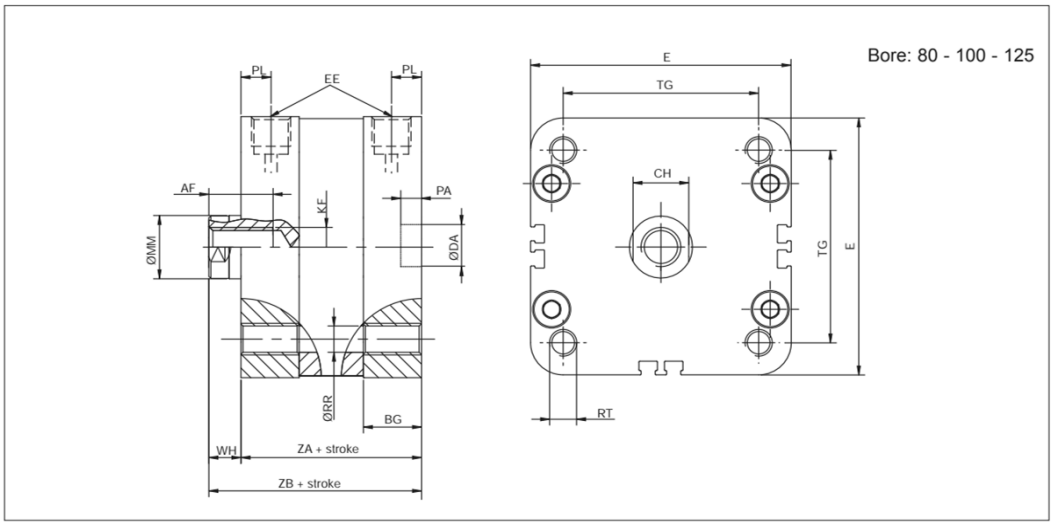

Ø (mm)	Ø MM f7	AF	WH	ZA	ZB	KF	EE	BG	RR	TG	E	RT	PL	CH	Ø DA H9	PA +0.1
80	20	20	10	54	64	M12	1/8"	17	8,4	72	96	M10	8	17	12	2,6
100	20	20	10	67	77	M12	1/8"	17	8,4	89	116	M10	8,5	17	12	2,6
125	25	24	11	81	92	M16	1/4"	20	10,2	110	135	M12	10	21	12	2,6